ELECTRIC PUMPS

Parts Diagram and Part Numbers
Plunger and Diaphragm Pumps

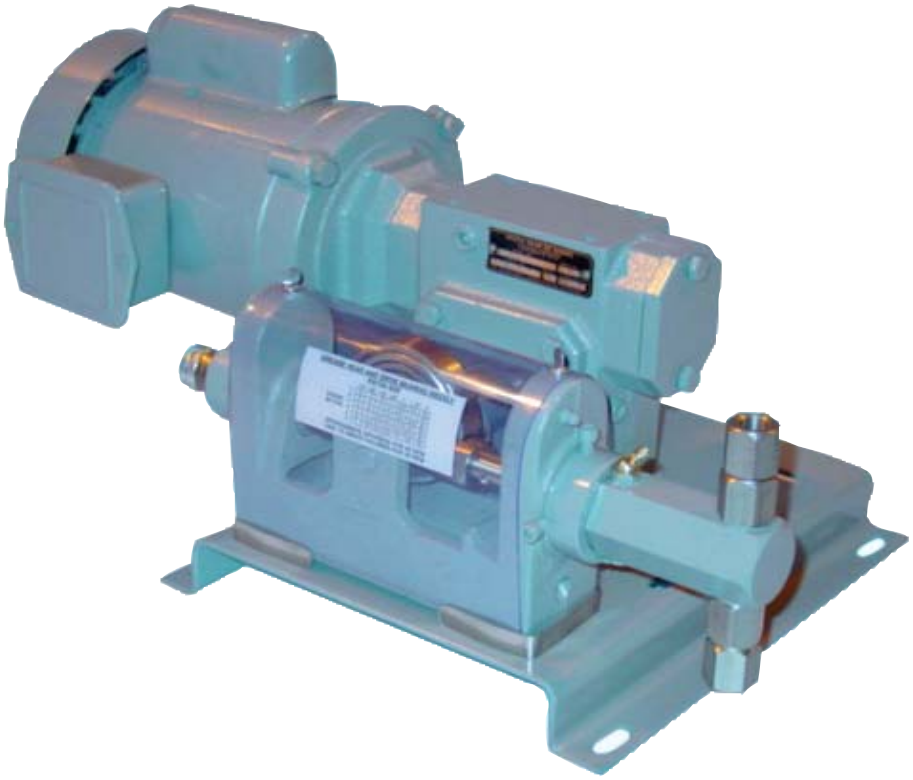

Sidewinder Pumps Inc
2108 S.W. Evangeline Thruway, Lafayette, Louisiana 70508
Office: (337) 235-9838 Fax (337) 235-9852
Website: www.sidewinderpumps.com
Email: sales@sidewinderpumps.com

TABLE OF CONTENTS

The V-10 Chemical Metering Pump

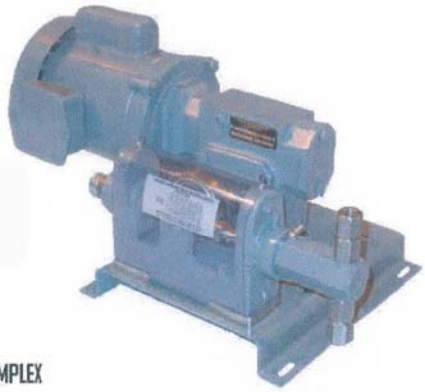

V-10 SIMPLEX

GENERAL INFORMATION

The V-10 is a high pressure, low volume, reciprocating plunger, positive displacement chemical metering pump. It is ideal for use in chemical feed to boilers, waste water treatment, the pulp and paper industry, and related applications where a controlled volume of chemical treatment is required.

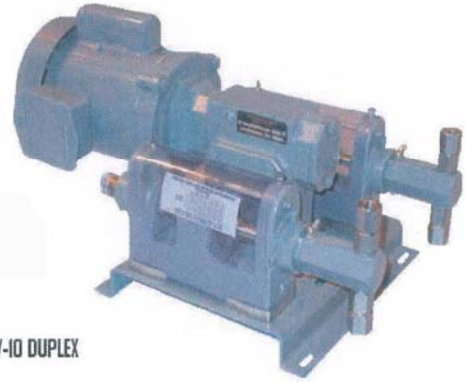

V-10 DUPLEX

CONSTRUCTION

The V-10 is designed for trouble free operation with a minimum of maintenance. Precision inline boring of the base casting insures exact alignment of the drive mechanism and the piston head assembly, minimizing wear. The drive mechanism is a heavy duty speed reducer, available in a number of ratios. Any 56C frame motor can be mounted on the heavy duty speed reducer making it easy to match the V-10 pump to special environments or electrical characteristics. The V-10 pump head is precision machined and has a ground and polished piston and double ball check valves on the inlet and outlet. The pump head comes standard in carbon steel but is available in various grades of stainless steel and the packing seals are available in Buna N, Viton, and Teflon. V-10 pump heads are available in numerous piston sizes from 1/4" to 2" to cover various pumping ranges and all are interchangeable on the same pump base casting. The pump is also available with multiple heads

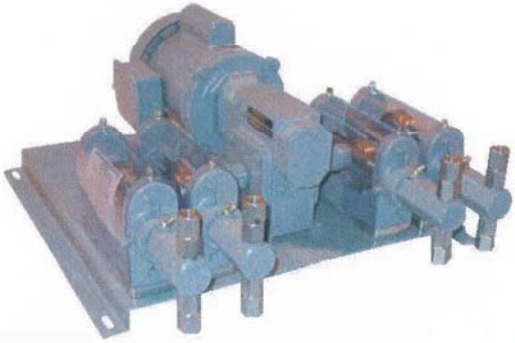

V-10 VERTICAL DRIVE

V-10 VARIABLE SPEED

V-5 & V-10 PUMP HEAD MAXIMUM CAPACITIES

MAXIMUM FULL STROKE OUTPUT PER PUMP HEAD SIZE AT VARIOUS STROKE RATES
VALUES BASED ON WATER
MINIMUM RECOMMENDED STROKE SETTING IS 20% OF MAXIMUM

1/4" DIA PISTON			1000 PSI MAX
STROKE	FULL STROKE OUTPUT		
RATE	ML/MIN	GPH	GPD
01	1	0.015	0.36
06	6	0.1	2.4
12	12	0.2	4.8
18	18	0.3	7.2
30	30	0.5	12
60	60	1	24

1" DIA PISTON			500 PSI MAX
STROKE	FULL STROKE OUTPUT		
RATE	ML/MIN	GPH	GPD
01	15	0.25	6
06	90	1.5	36
12	180	3	72
18	270	4	96
30	450	7	168
60	900	14	336

3/8" DIA PISTON			1000 PSI MAX
STROKE	FULL STROKE OUTPUT		
RATE	ML/MIN	GPH	GPD
01	1.66	0.026	0.62
06	10	0.16	3.8
12	20	0.32	7.6
18	30	0.48	11.5
30	50	0.8	19.2
60	100	1.6	38.4

1 1/2" DIA PISTON			100 PSI MAX
STROKE	FULL STROKE OUTPUT		
RATE	ML/MIN	GPH	GPD
01	30	0.5	12
06	180	3	72
12	360	6	144
18	540	9	216
30	900	15	360
60	1800	30	720

1/2" DIA PISTON			1000 PSI MAX
STROKE	FULL STROKE OUTPUT		
RATE	ML/MIN	GPH	GPD
01	3	0.05	1.2
06	18	0.3	7.2
12	36	0.6	14.4
18	54	0.9	21.6
30	94	1.5	36
60	188	3	72

2" DIA PISTON			100 PSI MAX
STROKE	FULL STROKE OUTPUT		
RATE	ML/MIN	GPH	GPD
01	60	1	24
06	360	6	144
12	720	12	288
18	1080	18	432
30	1800	30	720
60	3600	60	1440

5/8" DIA PISTON			1000 PSI MAX
STROKE	FULL STROKE OUTPUT		
RATE	ML/MIN	GPH	GPD
01	6	0.1	2.4
06	36	0.6	14.4
12	72	1.2	28.8
18	108	1.8	43.2
30	180	3	72
60	360	6	144

PISTON PUMP

INSTALLATION MANUAL

GENERAL

The Piston Pump is a rugged unit designed for reliability and long life. Like any other mechanical equipment, it's performance and service life are affected by it's conditions of use and maintenance. The pump should be located in an area away from excessive heat, freezing temperatures, or moisture and where it is accessible for routine inspection and lubrication. Installation should conform to code requirements for the locality.

INSTALLATION

In order to provide best performance and minimum maintenance, the following installation conditions are recommended.

1. The pump should be mounted below it's supply tank to facilitate a flooded suction to the pump. If the pump needs to be mounted above the supply tank, use of a foot valve is recommended. In all installations try to keep the suction line as short as possible and at least one pipe size larger than the pump inlet size. A strainer installed in the suction line will help prevent dirt or other contaminants from fouling the check valves.

2. **A pressure relief valve is supplied with each pump and must be installed in the discharge line,** in a tee, as close to the pump as possible. Plumb the discharge of the pressure relief valve back to the supply tank or to the suction piping to the pump.

3. The pump discharge should be to a point above the level of the supply tank or at a pressure greater than the suction head to the pump to prevent siphoning. If siphoning becomes a problem then an anti-siphon valve in the discharge line may be necessary.

4. Installing a tee and valve in the discharge line near the pump will aid in bleeding air from the system when priming the pump becomes necessary or for taking a sample of the material being pumped.

5. Check the motor nameplate to be sure the motor characteristics match the available power source. It is recommended that a length of flexible conduit be used between the motor and power source for ease of servicing.

6. **Be sure breather plug is installed in the speed reducer.**

PRE-STARTUP

1. Check to be sure all piping connections are secure and do not leak.
2. Suction and discharge valves are open.
3. Fill drive bearing reservoir with grease.

STARTUP

1. Prime the pump. Priming is best accomplished if there is no pressure on the discharge of the pump. If there is no air bleed valve installed then it may be necessary to break a connection in the discharge line to vent air. If the pump is drawing from above the supply tank, it may be necessary to fill the suction line to the pump manually. In some cases, as with pumps with spring loaded discharge check valves, it may be necessary to remove the discharge check valve from the head and fill the head with liquid, and reinstall the discharge check valve. Once the pump is primed close any air bleed valves or connections that were opened for the purpose of priming.

2. The pressure relief valve is preset at the factory to the value marked on it's tag. Check this value against the system pressure you need to overcome. The pressure relief valve needs to be set at a pressure greater than the system pressure but less than the safe working pressure of all equipment the pressure will see. Failure to use a pressure relief valve or set it properly will endanger equipment and operators. Adjustment of the pressure relief valve is done by removing the plastic cap and turning the set screw underneath clockwise to increase and counter clockwise to decrease the pop off pressure. Take care not to bottom out the set screw against the spring and ball.

3. Adjust the volume output of the pump to meet your requirements. Volume output is varied by adjusting the stroke length of the piston. The knurled adjustment screw on the end of the slide assembly can be backed out to shorten the stroke and consequently lessen the output. Graduated lines on the slide correspond to volumes on the output chart attached to the plastic cover on the pump. These values for the various pump models are approximate and may require adjustment depending on system parameters.

4. After a couple hours of run time check the pump and piping connections for leaks. On pumps with packing nuts, it may be necessary to tighten the packing nut a quarter turn or so to insure the packing is snug.

GENERAL MAINTENANCE

1. The slide and drive bearing should be greased monthly.

2. Pump heads with grease fittings should be greased at least every 500 hours of normal operation.

3. Packing nuts need to be snugged periodically depending on pump use and packing wear. Material seeping between the piston and packing is a good indication the packing nut needs adjustment. Persistent seeping even after adjustment indicates it is time to replace the piston and packing. Caution operators not to over tighten the packing nut as this will cause premature wear and strain the drive motor. Some pumps have spring loaded packing and adjustment is automatic.

TROUBLESHOOTING

UNDERFEED

1. Airbound— bleed air from the discharge
2. Check valves not seating—clean or replace
3. Restricted suction—clean strainer, use larger suction line
4. Relief valve by-passing—set for higher pressure, clean seat, replace

OVERFEED

1. Siphoning—raise discharge point above supply tank level, install anti-siphon valve
2. Too much suction head—use smaller day tank, install pressure reducing valve in suction line

MOTOR OVERHEATING

1. Excessive discharge pressure
2. Discharge line restricted or undersize
3. Insufficient ventilation
4. Lack of pump lubrication
5. Low supply voltage

REPLACEMENT PARTS

When ordering replacement parts it is helpful to have the serial number of the pump. The serial number is stamped into the lower right hand side of the pump base casting. Other helpful information to have on hand is the pump model number, stroking rate, piston diameter, head material, and motor nameplate data.

WARRANTY ON EQUIPMENT MANUFACTURED BY A & F MACHINE PRODUCTS

warrants the component parts and workmanship of it's products under normal use and service for a period of one year from date of shipment. All obligations and liabilities assumed under this warranty are limited to the repair or replacement, at our option, FOB of defective units that are returned, carrier charges prepaid. Improper use, application, or servicing voids all warranties. In no event shall be liable for indirect or consequential damages arising out of the provision or use of this equipment.

Warranty on equipment and accessories furnished by but not manufactured by e limited to the warranty of the respective equipment and/or accessory manufacturer for such units. akes no warranties of any kind or nature on such equipment, and in no event shall ble for indirect or consequential damages arising out of the provision or use of this equipment.

RECOMMENDED INSTALLATION OF THE TREATMENT PUMP

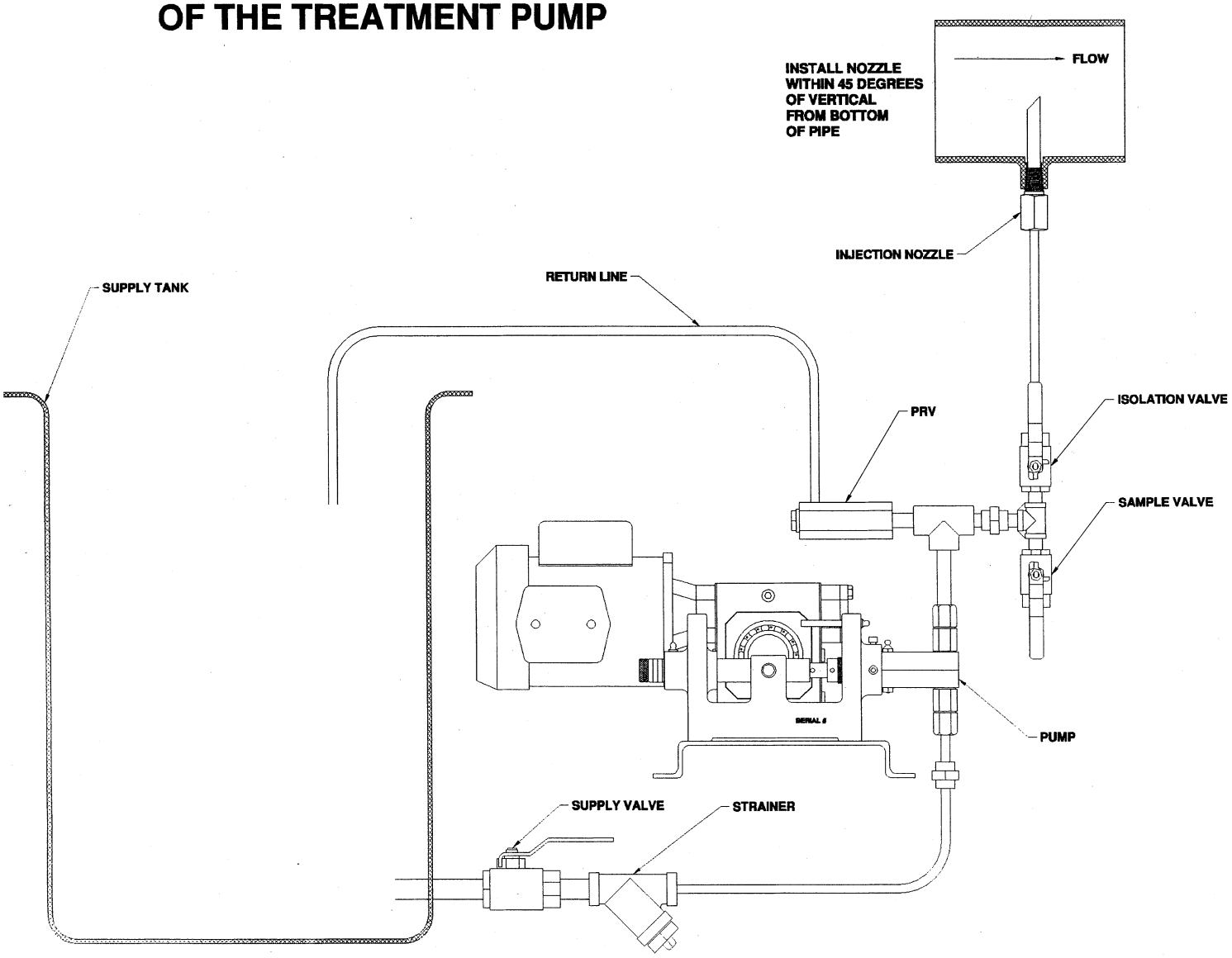

RECORD PUMP INFORMATION

MODEL NUMBER

_____

SERIAL NUMBER

_____

DATE INSTALLED

_____

NOTES

_____

_____

_____

_____

_____

SPEED REDUCER LUBRICATION

V-5 and V-10 pumps are shipped from the factory with the speed reducer filled with the proper amount of lubricant to operate within a 30 to 100 degree Fahrenheit ambient temperature range. The 60, 30, and 18 RPM output units are single reduction and the 12, 6, and 1 RPM output units are double reduction. Double reduction units have separate oil sumps and must be filled/checked independently. Prior to startup, verify that the oil level is at the proper level, by removing the level inspection plug which is positioned about the center of the output shaft on the side of the unit opposite the input shaft. The oil level should be at or near this level. If the ambient temperature will be outside the range for the lubricant installed at the factory, drain and refill the reducer with the proper viscosity lubricant prior to use. Consult the factory or the chart below for alternate lubricants. Be sure to install the breather plug in the proper location on the top or side of the reducer near the top of the reducer.

Change Intervals: Standard compounded lubricants should be changed every six months or 2500 operating hours, whichever comes first. Factory installed synthetic lubricants should be changed every two years or 6000 hours, whichever comes first. Oil should be changed more often if reducer is used in a severe environment. The factory supplied oil is not suitable for the Food and Drug Industry.

MANUFACTURER	30-100 DEGREE F AMBIENT AGMA Compounded #7	50-125 DEGREE F AMBIENT AGMA Compounded #8
Amoco Oil Co.	Worm Gear Oil	Cylinder Oil #680
Chevron USA, Inc.	Cylinder Oil #460X	Cylinder Oil #680X
Exxon Co. USA	Cylesstic TK-460	Cylesstic TK-680
Gulf Oil Co.	Senate 460	Senate 680D
Mobile Oil Corp.	600 W Super Cylinder	Extra Hecla Super
Shell Oil Co.	Valvata Oil J460	Valvata Oil J680
Sun Oil Co.	Gear Oil 7C	Gear Oil 8C
Texaco	Honor Cylinder Oil	650T Cylinder Oil
Union Oil Co. of CA	Steaval A	Worm Gear Lube 140

TYPICAL INSTALLATION OF THE PRESSURE RELIEF VALVE

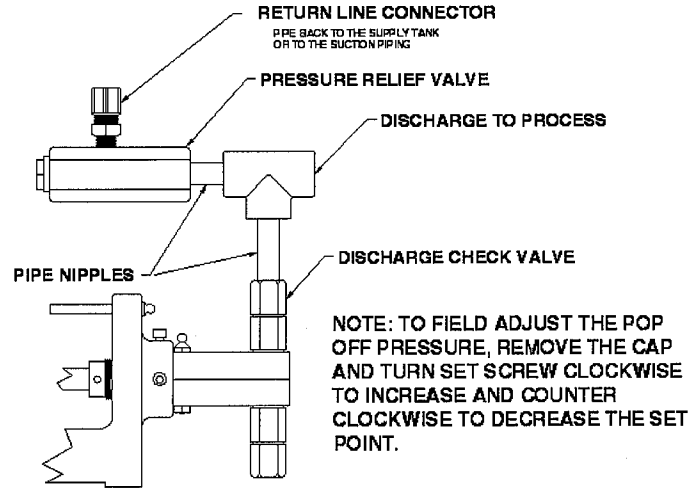

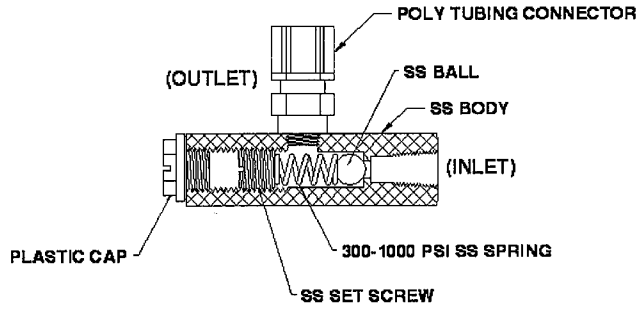

Each pump is supplied from the factory with a pressure relief valve for each pump head on the pump. The pressure relief valve is a safety device and must be installed in the discharge line from the pump as close to the discharge check valve as possible. Set the pressure relief valve pop off pressure to a low enough value to insure protection to the equipment operator and associated system piping in case of a blockage down stream of the pump. Failure to properly install or adjust the pop off pressure of the pressure relief valve could result in injury to the operator or damage to the equipment.

PISTON HEAD PARTS BREAKDOWN 1/4" THRU 5/8" BORE

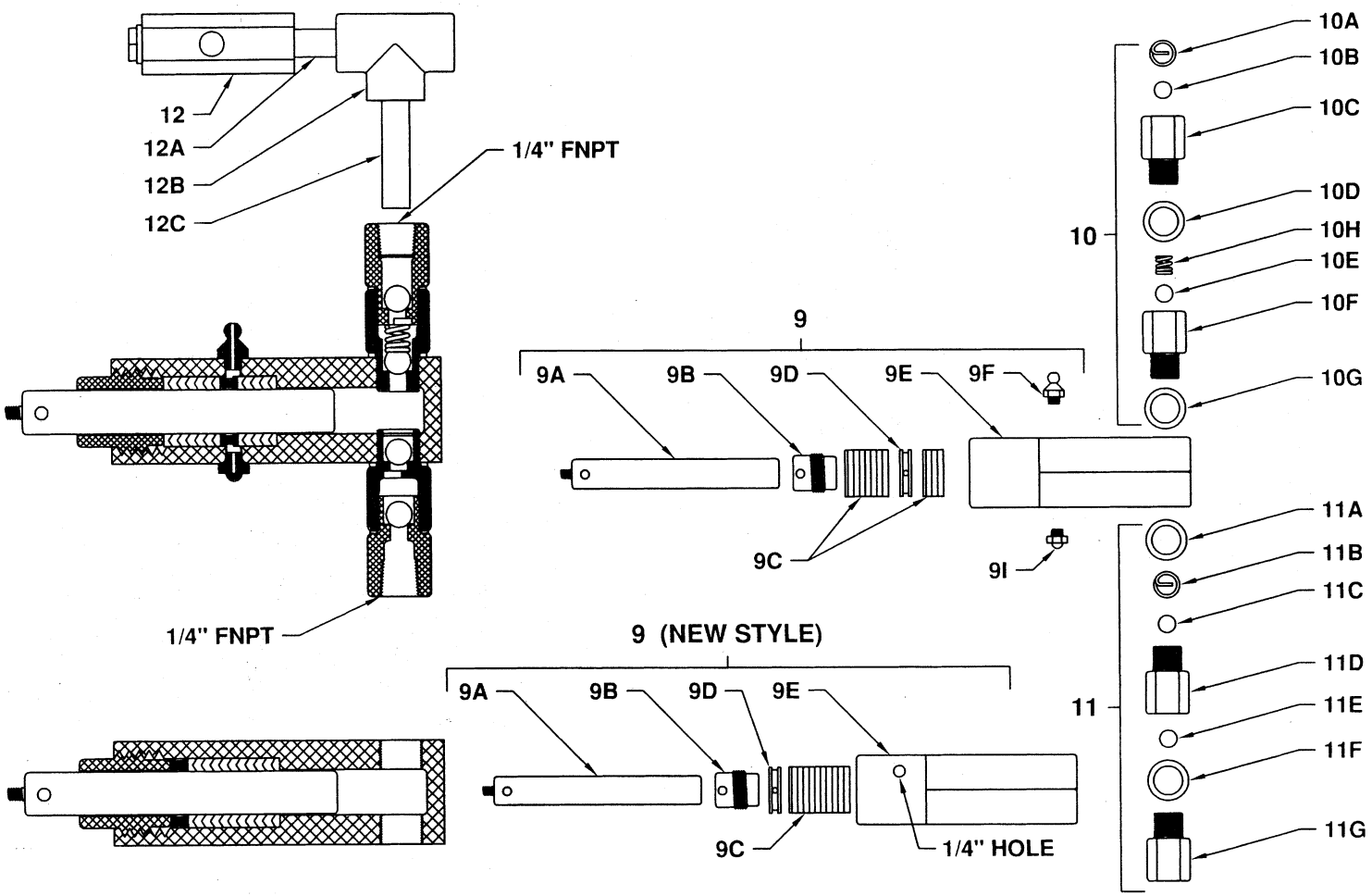

ITEM	PART #	DESCRIPTION
9	1000-5 **	CS PISTON HEAD ASSEMBLY 5/8"
	1000-4 **	CS PISTON HEAD ASSEMBLY 1/2"
	1000-3 **	CS PISTON HEAD ASSEMBLY 3/8"
	1000-2 **	CS PISTON HEAD ASSEMBLY 1/4"
9A*	007-4 ***	303SS PISTON 5/8" DIA
	007-3 ***	303SS PISTON 1/2" DIA
	007-2 ***	303SS PISTON 3/8" DIA
	007-1 ***	303SS PISTON 1/4" DIA
9B	003-6	PACKING NUT 5/8" BORE
	003-1	PACKING NUT 1/2" BORE
	003-2	PACKING NUT 3/8" BORE
	003-4	PACKING NUT 1/4" BORE
9C*	012-4	PACKING SET 5/8" BORE (BUNA)
	012-3	PACKING SET 1/2" BORE (BUNA)
	012-2	PACKING SET 3/8" BORE (BUNA)
	012-1	PACKING SET 1/4" BORE (BUNA)
9D	017-4	GREASE GLAND 5/8" & 1/2" BORE
	017-1	GREASE GLAND 3/8" & 1/4" BORE
9E	001-6 **	CS PUMP HEAD SHELL 5/8" BORE
	001-1 **	CS PUMP HEAD SHELL 1/2" BORE
	001-2 **	CS PUMP HEAD SHELL 3/8" BORE
	001-4 **	CS PUMP HEAD SHELL 1/4" BORE
9F	006-1	GREASE FITTING
9I	006	GREASE RELIEF FITTING

ITEM	PART #	DESCRIPTION
10*	002-D ***	303SS DISCHARGE CHECK VALVE ASSY.
10A	002-7	BALL RETAINER
10B	002-5	3/8" DIA STAINLESS STEEL BALL
10C	002-3	TOP DISCHARGE CHECK BODY
10D*	002-6	COPPER SEAL
10E	002-5	3/8" DIA STAINLESS STEEL BALL
10F	002-2	BOTTOM DISCHARGE CHECK BODY
10G*	002-6	COPPER SEAL
10H	002-0	ANTI-SYPHON SPRING (OPTIONAL)
11*	002-S ***	303SS SUCTION CHECK VALVE ASSY.
11A*	002-6	COPPER SEAL
11B	002-7	BALL RETAINER
11C	002-5	3/8" DIA STAINLESS STEEL BALL
11D	002-1	TOP SUCTION CHECK BODY
11E	002-5	3/8" DIA STAINLESS STEEL BALL
11F*	002-6	COPPER SEAL
11G	002-4	BOTTOM SUCTION CHECK BODY
12	18	1/4" 303SS PRESSURE RELIEF VALVE
12A		1/4" X 1 1/2" BLACK NIPPLE
12B		1/4" 300 PSI BLACK "T"
12C		1/4" X 2 1/2" BLACK NIPPLE

* RECOMMENDED SPARE PARTS
OPTIONAL PACKING MATERIAL
TEFLON
VITON

** OPTIONS
303SS
316SS
C20
HC

*** OPTIONS
316SS
C20
HC

CS-CARBON STEEL
C20-ALLOY 20
HC-ALLOY 276

1" PISTON HEAD PARTS BREAKDOWN

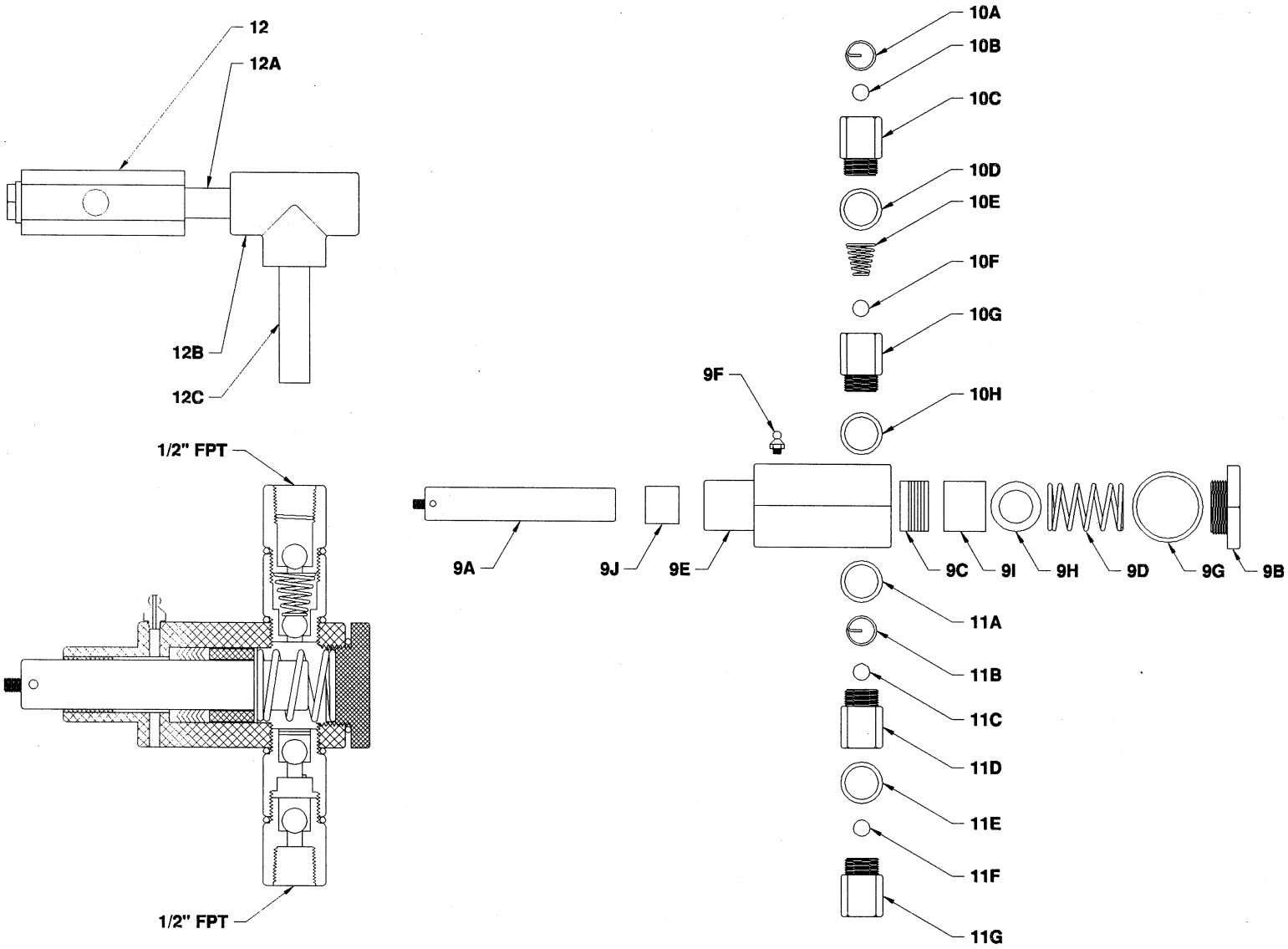

ITEM	PART #	DESCRIPTION
9	1000-6 **	CS PISTON HEAD ASSEMBLY 1" BORE
9A*	007-7 ***	303SS PISTON 1" DIA.
9B	003-7**	CS PACKING END CAP
9C*	012-7	1" PACKING SET
9D	017-10	PACKING SPRING
9E	001-7**	CS PUMP HEAD SHELL
9F	006-1	GREASE FITTING
9G*	017-9	1 7/8" ID X 1/8" "O" RING SEAL
9H	017-8	STAINLESS PACKING WASHER
9I	018-3	PACKING SPACER
9J	008-20	1 1/8" X 1" X 1" OILITE BEARING
10*	002-1"D ***	303SS DISCHARGE CHECK VALVE ASSY.
10A	002-24	BALL RETAINER
10B	002-26	1/2" DIA STAINLESS STEEL BALL
10C	002-20	TOP DISCHARGE CHECK BODY
10D	002-25	1" ID X 1/8" "O" RING SEAL

ITEM	PART #	DESCRIPTION
10E	002-27	ANTI-SYPHON SPRING
10F	002-26	1/2" DIA STAINLESS STEEL BALL
10G	002-21	BOTTOM DISCHARGE CHECK BODY
10H	002-25	1" ID X 1/8" "O" RING SEAL
11*	002-1"S ***	303SS SUCTION CHECK VALVE ASSY.
11A	002-25	1" ID X 1/8" "O" RING SEAL
11B	002-24	BALL RETAINER
11C	002-26	1/2" DIA STAINLESS STEEL BALL
11D	002-22	TOP SUCTION CHECK BODY
11E	002-25	1" ID X 1/8" "O" RING SEAL
11F	002-26	1/2" DIA STAINLESS STEEL BALL
11G	002-23	BOTTOM SUCTION CHECK BODY
12	36	1/2" 303SS PRESSURE RELIEF VALVE
12A		1/2" X 1 1/2" BLACK NIPPLE
12B		1/2" BLACK "T"
12C		1/2" X 2 1/2" BLACK NIPPLE

* RECOMMENDED SPARE PARTS

** OPTIONS
303SS
316SS
C20

*** OPTIONS
316SS
C20

CS-CARBON STEEL
C20-ALLOY 20

1 1/2" AND 2" PISTON HEAD PARTS BREAKDOWN

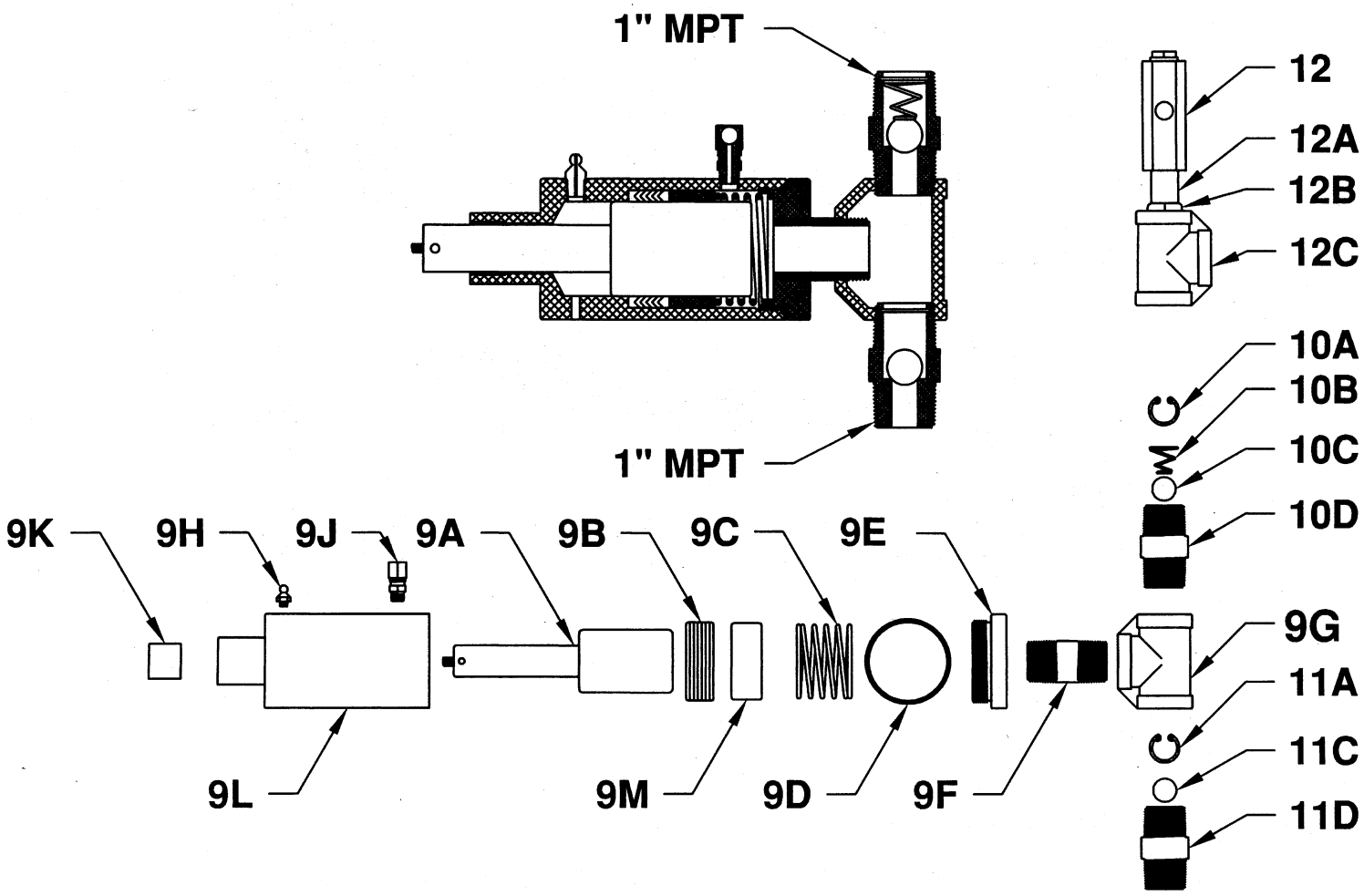

ITEM	PART #	DESCRIPTION
9	1000-7 ****	CS PISTON HEAD ASSY. W/CKS 1 1/2" BORE
	1000-8 ****	CS PISTON HEAD ASSY. W/CKS 2" BORE
9A*	007-8 ***	303SS PISTON 1 1/2" DIA
	007-9 ***	303SS PISTON 2" DIA
9B*	012-8	PACKING 1 1/2" BORE
	012-9	PACKING 2" BORE
9C	017-20	PACKING SPRING
9D*	017-21	2 1/2" ID X 1/8" "O" RING SEAL
9E	003-20	CS PACKING END CAP
9F	002-13	1" X CLOSE BLACK NIPPLE
	002-13-S	1" X CLOSE 316SS NIPPLE
9G	002-12	1" BLACK "T"
	002-12-S	1" 316SS "T"
9H	006-1	GREASE FITTING
9J	017-17-S	316SS VENT CHECK
9K	008-20	1 1/8" X 1" X 1" OILITE BEARING
9L	001-20 **	CS PUMP HEAD SHELL 1 1/2" & 2"
9M	018-1	PACKING SPACER 1 1/2" BORE
	018-2	PACKING SPACER 2" BORE

ITEM	PART #	DESCRIPTION
10*	002-19-D ***	303SS DISCHARGE CHECK VALVE ASSY.
10A	16-SS	STAINLESS STEEL SNAP RING RETAINER
10B	002-27	ANTI-SYPHON SPRING
10C	002-17	3/4" STAINLESS STEEL BALL
10D	002-18	CHECK VALVE BODY
11*	002-19-S ***	303SS SUCTION CHECK VALVE ASSY.
11A	16-SS	STAINLESS STEEL SNAP RING RETAINER
11C	002-17	3/4" STAINLESS STEEL BALL
11D	002-18	CHECK VALVE BODY
12	36	1/2" 303SS PRESSURE RELIEF VALVE
12A		1/2" 1 1/2" BLACK NIPPLE
12B		1" X 1/2" BLACK BUSHING
12C	002-12	1" BLACK "T"

* RECOMMENDED SPARE PARTS

CS-CARBON STEEL
C20-ALLOY 20

** OPTIONS
303SS
316SS
C20

*** OPTIONS
316SS
C20

**** OPTIONS
303SS
316SS
C20

5/8" DIAPHRAGM HEAD PARTS BREAKDOWN

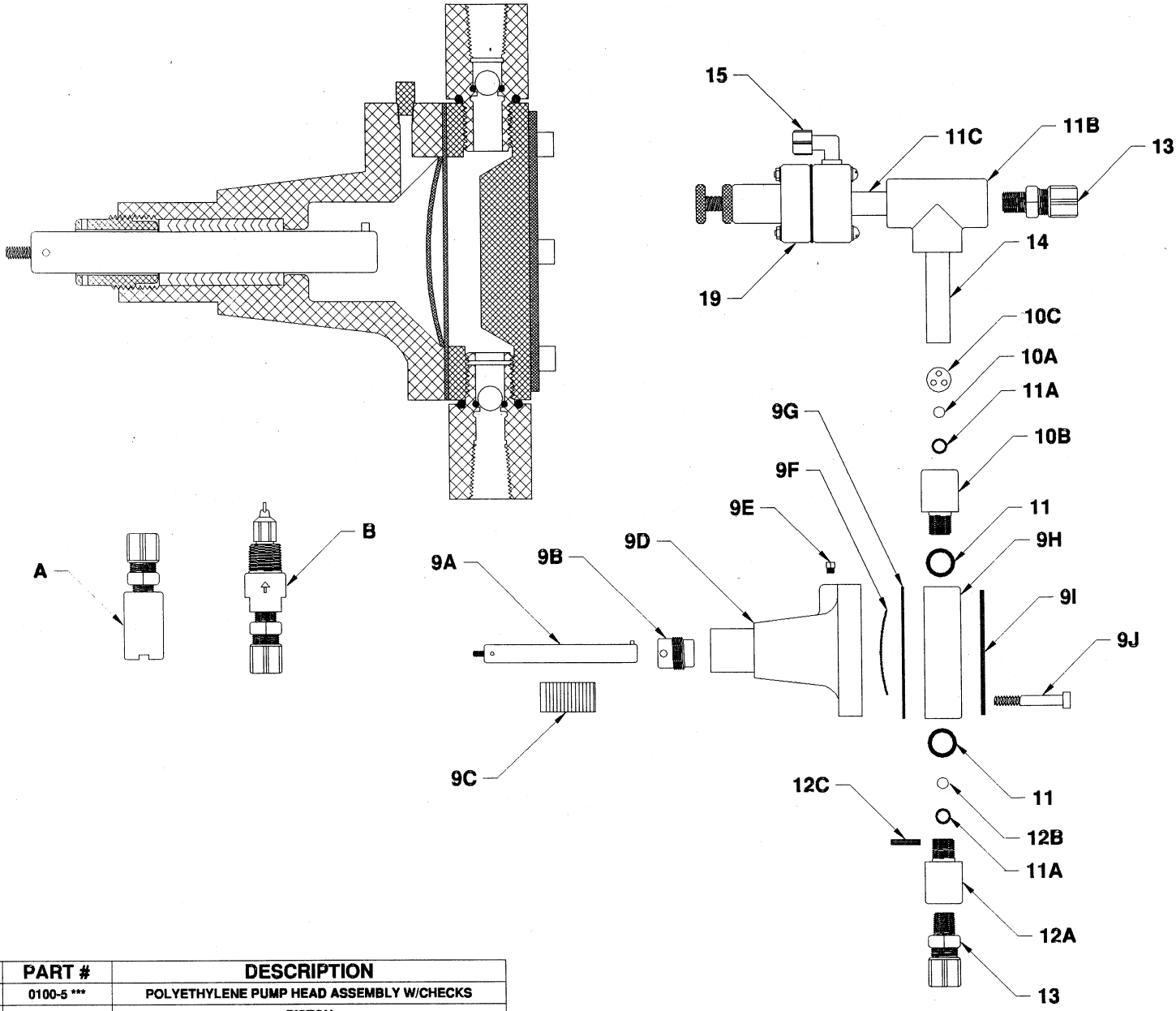

ITEM	PART #	DESCRIPTION
9	0100-5 ***	POLYETHYLENE PUMP HEAD ASSEMBLY W/CHECKS
9A	007-H	PISTON
9B	003-6	PACKING NUT
9C	012-H	PACKING SET
9D	001-H	HYDRAULIC CASTING
9E	0006-2	1/8" PIPE PLUG
9F	030-H	SCREEN
9G*	026-H-2	TEFLON DIAPHRAGM (STANDARD)
	026-H-1	VITON DIAPHRAGM
	026-H-3	NEOPRENE DIAPHRAGM
9H	025-H-1 **	POLYETHYLENE PUMP HEAD (STANDARD)
	025-H-2	303SS PUMP HEAD
	025-H-3	PVC PUMP HEAD
9I	029-H	PUMP HEAD CLAMP PLATE
9J	027-H	HEAD BOLTS (6 REQ)

* RECOMMENDED SPARE PARTS

C20-ALLOY 20

** OPTIONS
316SS
C20

*** OPTIONS
303SS
316SS
C20

ITEM	PART #	DESCRIPTION
10*	002-DH	DISCHARGE CHECK VALVE ASSY. (POLYETHYLENE)
10A	002-9	3/8" CERAMIC BALL
10B	002-1H	CHECK VALVE BODY
10C	002-7H	BALL RETAINER DISK
11	028-H	3/4" ID X 1/8" "O" RING SEAL
11A	028-S	VITON "O" RING SEAT
11B	050-P-16	3/8" PVC "T"
11C	050-P-38	3/8" X 2" PVC NIPPLE
12*	002-SH	SUCTION CHECK VALVE ASSY. (POLYETHYLENE)
12A	002-1H	CHECK VALVE BODY
12B	002-9	3/8" CERAMIC BALL
12C	002-8H	BALL RETAINING PIN
13	050-P-38-38	3/8" MNPT TO 3/8" OD TUBE FITTING
14	050-P-38	3/8" X 2" PVC NIPPLE
15	18-14-90	1/4" MNPT X 1/4" OD TUBE ELBOW FITTING
19	19	3/8" POLYETHYLENE PRESSURE RELIEF VALVE
A	9	POLYETHYLENE FOOT VALVE
B	8	POLYETHYLENE INJECTION NOZZLE

1" DIAPHRAGM HEAD PARTS BREAKDOWN

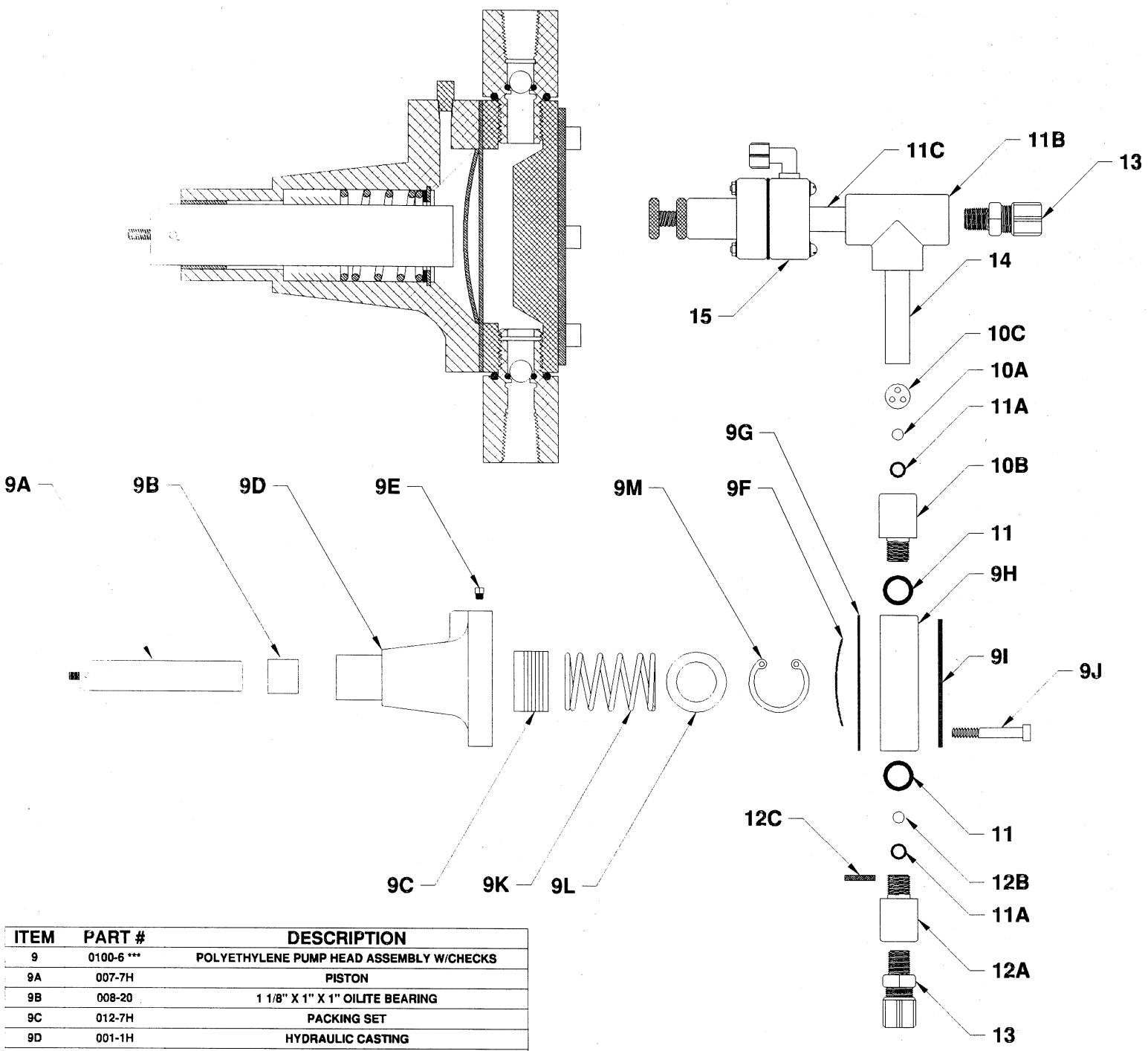

ITEM	PART #	DESCRIPTION
9	0100-6 ***	POLYETHYLENE PUMP HEAD ASSEMBLY W/CHECKS
9A	007-7H	PISTON
9B	008-20	1 1/8" X 1" X 1" OILITE BEARING
9C	012-7H	PACKING SET
9D	001-1H	HYDRAULIC CASTING
9E	0006-2	1/8" PIPE PLUG
9F	030-H	SCREEN
9G*	026-H-2	TEFLON DIAPHRAGM (STANDARD)
	026-H-1	VITON DIAPHRAGM
	026-H-3	NEOPRENE DIAPHRAGM
9H	025-H-1 **	POLYETHYLENE PUMP HEAD (STANDARD)
	025-H-2	303SS PUMP HEAD
	025-H-3	PVC PUMP HEAD
9I	029-H	PUMP HEAD CLAMP PLATE
9J	027-H	HEAD BOLTS (6 REQ)
9K	017-10	1" PACKING SPRING
9L	017-8	WASHER

ITEM	PART #	DESCRIPTION
9M	015	SNAP RING
10*	002-DH	DISCHARGE CHECK VALVE ASSY. (POLYETHYLENE)
10A	002-9	3/8" CERAMIC BALL
10B	002-1H	CHECK VALVE BODY
10C	002-7H	BALL RETAINER DISK
11	028-H	3/4" ID X 1/8" "O" RING SEAL
11A	028-S	VITON "O" RING SEAT
11B	050-P-16	3/8" PVC "T"
11C	050-P-38	3/8" X 2" PVC NIPPLE
12*	002-SH	SUCTION CHECK VALVE ASSY. (POLYETHYLENE)
12A	002-1H	CHECK VALVE BODY
12B	002-9	3/8" CERAMIC BALL
12C	002-8H	BALL RETAINING PIN
13	050-P-38-38	3/8" MNPT TO 3/8" OD TUBE FITTING
14	050-P-38	3/8" X 2" PVC NIPPLE
15	36P	1/2" POLYETHYLENE PRESSURE RELIEF VALVE

* RECOMMENDED SPARE PARTS

C20-ALLOY 20

** OPTIONS
316SS
C20

*** OPTIONS
303SS
316SS
C20

1 1/2" AND 2" DIAPHRAGM HEAD PARTS BREAKDOWN

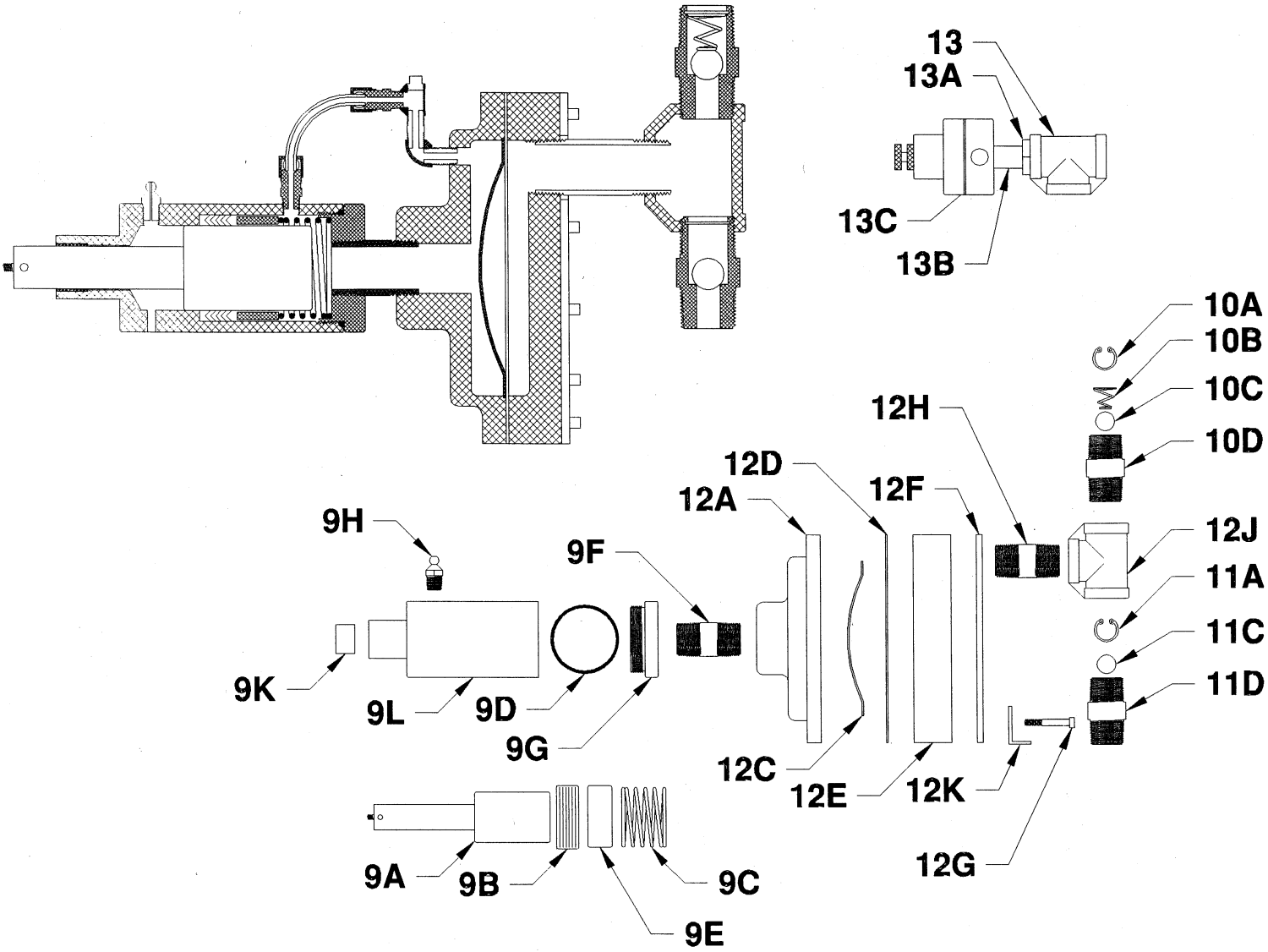

ITEM	PART #	DESCRIPTION
9	0100-7 ***	POLYETHYLENE PUMP HEAD ASSEMBLY 1 1/2"
	0100-8 ***	POLYETHYLENE PUMP HEAD ASSEMBLY 2"
9A*	007-8	PISTON 1 1/2" DIA
	007-9	PISTON 2" DIA
9B*	012-8	PACKING 1 1/2" BORE
	012-9	PACKING 2" BORE
9C	017-20	PACKING SPRING
9D	017-21	2 1/2" ID X 1/8" "O" RING SEAL
9E	018-1	PACKING SPACER 1 1/2" BORE
	018-2	PACKING SPACER 2" BORE
9F	002-13	1" X CLOSE BLACK NIPPLE
9G	003-20	PACKING NUT END CAP
9H	006-1	GREASE FITTING
9K	008-20	1 1/8" X 1" X 1" OILITE BEARING
9L	001-20	PUMP HEAD SHELL 1 1/2" & 2"
10*	002-22P-D	POLYETHYLENE DISCHARGE CHECK VALVE ASSEMBLY
	002-19-D **	303SS DISCHARGE CHECK VALVE ASSEMBLY
10A	16-SS	STAINLESS STEEL SNAP RING RETAINER
10B	002-27	ANTI-SYPHON SPRING
10C	007-20	3/4" CERAMIC BALL
	002-17	3/4" STAINLESS STEEL BALL
10D	002-30	POLYETHYLENE CHECK VALVE BODY
	002-18	303SS CHECK VALVE BODY

ITEM	PART #	DESCRIPTION
11*	002-22P-S	POLYETHYLENE SUCTION CHECK VALVE ASSEMBLY
	002-19-S **	303SS SUCTION CHECK VALVE ASSEMBLY
11A	16-SS	STAINLESS STEEL SNAP RING RETAINER
11C	007-20	3/4" CERAMIC BALL
	002-17	3/4" STAINLESS STEEL BALL
11D	002-30	POLYETHYLENE CHECK VALVE BODY
	002-18	303SS CHECK VALVE BODY
12A	001-H20	HYDRAULIC CASTING
12C	030-2H	SCREEN
12D	026-2H	TEFLON DIAPHRAGM
12E	025-H20	POLYETHYLENE PUMP HEAD (STANDARD)
	025-H20-S **	303SS PUMP HEAD
12F	029-H20	POLYETHYLENE PUMP HEAD CLAMP PLATE
12G	027-H20	HEAD BOLTS (12 REQ)
12H	002-13-P	1" X SHORT PVC NIPPLE
	002-13-S	1" X CLOSE 316SS NIPPLE
12J	002-12-P	1" PVC "T"
	002-12-S	1" 316SS "T"
12K	031	HEAD SUPPORT LEG
13	002-12-P	1" PVC "T"
13A		1" X 1/2" PVC BUSHING
13B		1/2" X 1 1/2" PVC NIPPLE
13C	36P	1/2" POLYETHYLENE PRESSURE RELIEF VALVE

* RECOMMENDED SPARE PARTS

** OPTIONS
316SS

*** OPTIONS
303SS
316SS

V-5 COUPLING & V-10 FLANGE DRIVE

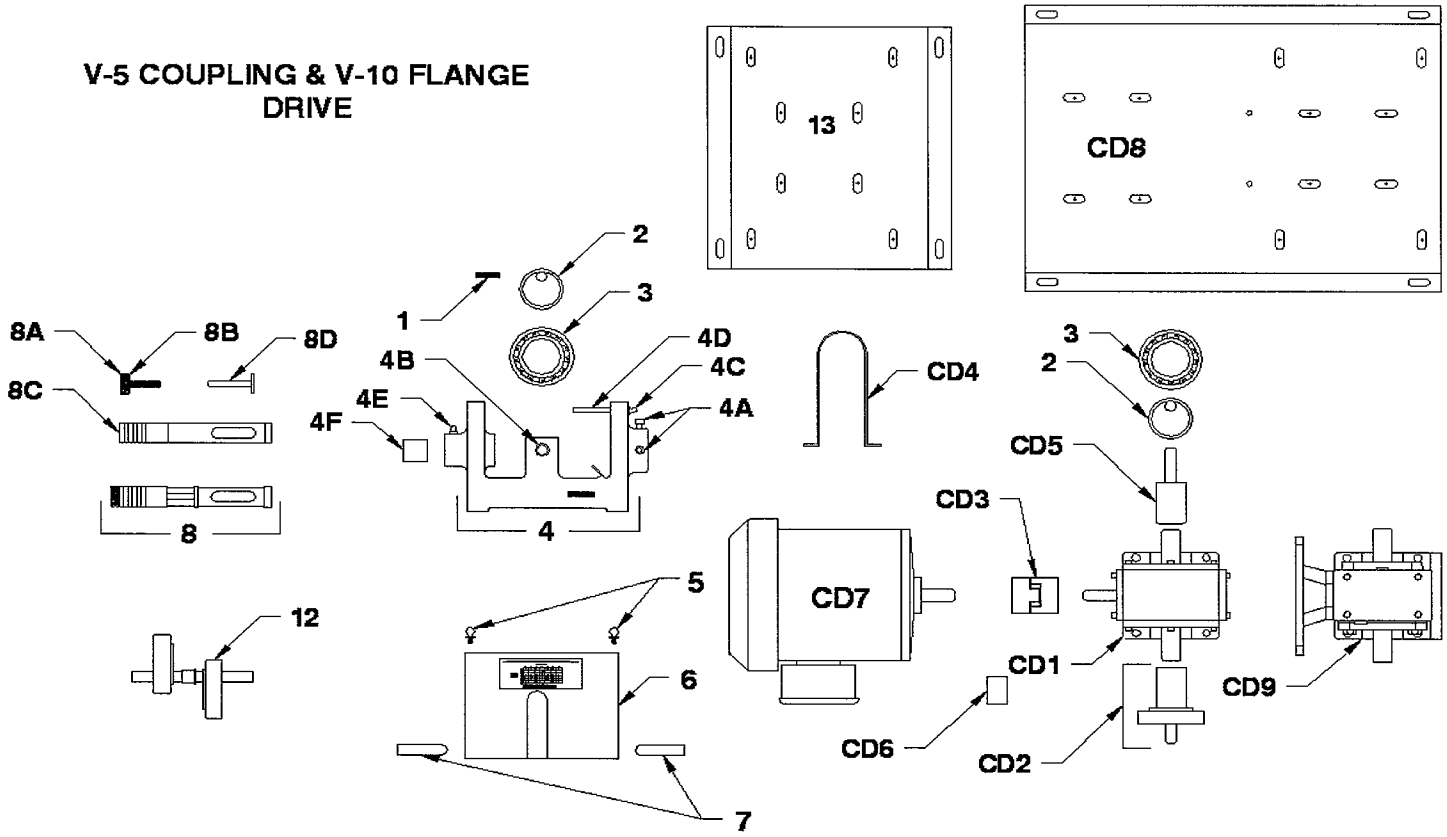

ITEM	PART #	DESCRIPTION
1	**1101-1**	3/16" X 1 1/4" ROLLED DRIVE PIN
2	**1101**	DRIVE BEARING SUPPORT CAM
3	**3L09**	DRIVE BEARING
4	**008-2**	STANDARD RIGHT HAND BASE CASTING
	008-2D	INSIDE CASTING ON DUPLEX ASSEMBLY
	008-2L	LEFT HAND BASE CASTING
4B	**008-4**	1/4-20 X 1/2" ALLEN CAP SCREW (2 REQ)
4C	**008-5**	5/8" OD X 1/2" ID X 1/2" LONG OILITE BEARING
	008-6	5/8" OD X .485" ID X 1/2" LONG OILITE BEARING
4D	**006-2**	DRIVE BEARING GREASE FITTING
4E	**006-3**	GREASE TUBE
4F	**006-2**	SLIDE BUSHING GREASE FITTING
4G	**008-10**	1 1/8" OD X 1" ID X 1" LONG OILITE BEARING (2 REQ)
5	**1102-1**	COVER SCREW (2 REQ)
6	**1102**	CLEAR PLASTIC COVER (STANDARD RIGHT HAND)
	1102-D	CLEAR PLASTIC COVER (LEFT HAND)
	1102-GC	STAINLESS STEEL GASKETED COVER
7	**1102-2**	COVER CLIP (2 REQ)
8	**A-1097-1**	SLIDE ASSEMBLY SIMPLEX OR DUPLEX
8A	**1100**	SLIDE ADJUSTMENT SCREW
8B	**1099**	ADJUSTMENT SCREW LOCKNUT
8C	**A-1097**	SIMPLEX OR DUPLEX SLIDE
8D	**1098**	SLIDE PIN
12	**009**	DUPLEX DRIVE SHAFT ASSEMBLY
	009-H	HYDRAULIC DUPLEX DRIVE SHAFT ASSEMBLY
13	**FBP**	V-10 SIMPLEX & DUPLEX BASE PLATE
CD1	**192A02-25:1**	60 RPM COUPLING DRIVE SPEED REDUCER (V-5)
	192A02-50:1	30 RPM COUPLING DRIVE SPEED REDUCER (V-5)
	192A02-100:1	18 RPM COUPLING DRIVE SPEED REDUCER (V-5)

ITEM	PART #	DESCRIPTION
CD2	**3L09 CD**	DRIVE BEARING ASSEMBLY FOR 7/8" SHAFT
CD3	**L075**	5/8" X 5/8" FLEXIBLE COUPLING
CD4	**FCG**	COUPLING GUARD
CD5	**VAS-CD**	OUTPUT COUPLING FOR 7/8" SHAFT
	VAS-CD-D	7/8" COUPLING FOR TRIPLEX OR QUAD
CD6	**MS**	MOTOR SPACER (4 REQ)
CD7	**MO-3**	1PH 120/240 VAC 60HZ 1/2 HP EPFC 56 FRAME
	MO-4	90 VDC 1/2 HP TEFC 56/56C FRAME
	MO-6	3PH 230/460 VAC 60HZ 1/2 HP EPFC 56 FRAME
	MO-7	3PH 230/460 VAC 60HZ 1/2 HP TEFC 56 FRAME
	MO-8	1PH 120/240 VAC 60HZ 1/2 HP TEFC 56 FRAME
	MO-12	1PH 120/240 VAC 60HZ 1/3 HP TEFC 56C FRAME
	MO-12V	1PH 120/240 VAC 60HZ 1/2 HP TEFC 56 FRAME
	MO-13	1PH 120/230 VAC 60HZ 1/2 HP EPFC 56C FRAME
	MO-14	90 VDC 1/4 HP TENV 56C FRAME
	MO-14V	90 VDC 1/2 HP TENV 56/56C FRAME
	MO-15	3PH 230/460 VAC 60HZ 1/3 HP TEFC 56C FRAME
	MO-15V	3PH 230/460 VAC 60HZ 1/2 HP TEFC 56C FRAME
	MO-16	3PH 240/480 VAC 60HZ 1/2 HP EPFC 56C FRAME
	MO-17	3PH 575 VAC 60HZ 1/3 HP TEFC 56C FRAME
	MO-18	1PH 115/230 VAC 50/60HZ 1/2 HP TEFC 56C FRAME
	MO-19	3PH 230/460 VAC 1/2 HP TENV INVERTER DUTY 56C
	MO-20	1PH 120/240 VAC 60HZ 1/2 HP SEVERE DUTY 56C
CD8	**BP-CD**	COUPLING DRIVE BASE PLATE
CD9	**FMSR-60**	60 RPM 56C FLANGED SPEED REDUCER (V-10)
	FMSR-30	30 RPM 56C FLANGED SPEED REDUCER (V-10)
	FMSR-18	18 RPM 56C FLANGED SPEED REDUCER (V-10)
	FMSR-12	12 RPM 56C FLANGED SPEED REDUCER (V-10)
	FMSR-6	6 RPM 56C FLANGED SPEED REDUCER (V-10)
	FMSR-1	1 RPM 56C FLANGED SPEED REDUCER (V-10)

PISTON HEAD 1/4" THRU 5/8" BORE WITH GREASE FITTING LUBRICATION

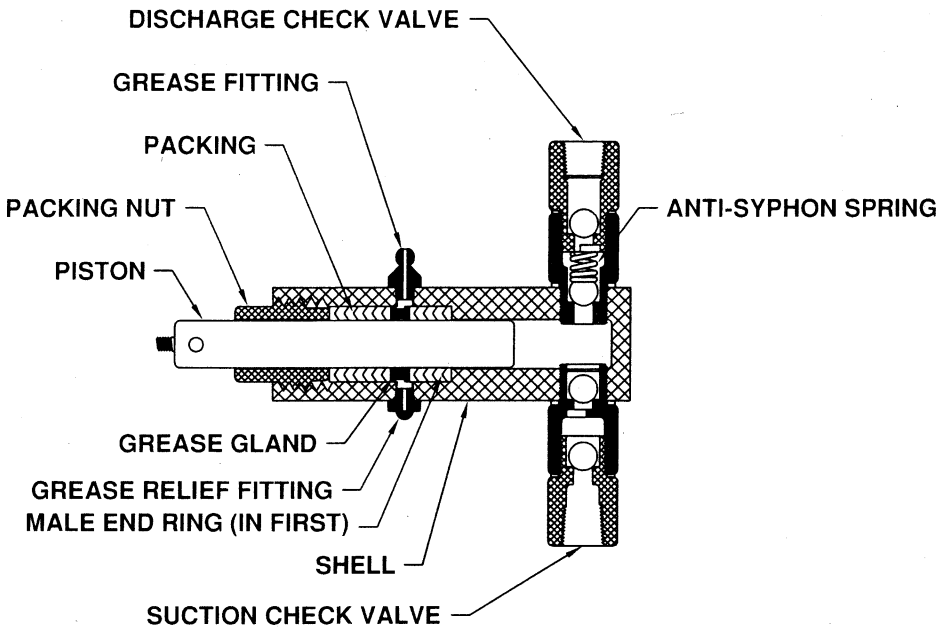

PACKING REPLACEMENT PROCEDURE

1) DISCONNECT ANY PIPING FROM THE SUCTION AND DISCHARGE CHECK VALVES
2) LOOSEN THE TWO SET SCREWS THAT HOLD THE HEAD INTO THE BASE CASTING
3) PULL THE HEAD OUT OF THE BASE CASTING
4) INSPECT THE PISTON FOR WEAR AND REPLACE IF SCORED OR WORN
5) UNSCREW THE PACKING NUT FROM THE HEAD SHELL
6) PULL THE OLD PACKING OUT OF THE HEAD ONE RING AT A TIME USING A HOOKED TOOL, TAKING CARE NOT TO DAMAGE THE GREASE GLAND SO IT CAN BE REUSED
7) CLEAN ANY DIRT OR GRIT FROM THE HEAD SHELL
8) STARTING WITH THE RING MARKED "THIS RING IN FIRST" INSTALL THE NEW PACKING ONE RING AT A TIME MAINTAINING THE PROPER STACK FORMATION. THE PACKING SET IS IN TWO SECTIONS WITH THE GREASE GLAND INSTALLED BETWEEN THEM AND ALIGNED UNDER THE GREASE FITTING. IT IS RECOMMENDED THAT EACH RING BE LUBRICATED WITH GREASE OR OIL BEFORE IT IS INSERTED INTO THE SHELL.
9) THE PACKING NUT SHOULD BE CLEANED AND INSTALLED FINGER TIGHT AGAINST THE PACKING
10) SLIDE THE PACKED HEAD OVER THE PISTON INTO THE BASE CASTING AND SECURE WITH THE TWO SET SCREWS
11) SNUG UP THE PACKING NUT-DO NOT OVER TIGHTEN
12) GREASE THE HEAD UNTIL GREASE IS EXPELLED FROM THE GREASE RELIEF FITTING
13) RECONNECT THE PIPING AND CHECK FOR LEAKS
14) RESNUG THE PACKING NUT AFTER TWO HOURS OF BREAK-IN TIME

PISTON HEAD 1/4" THRU 5/8" BORE WITH GREASE PORT LUBRICATION

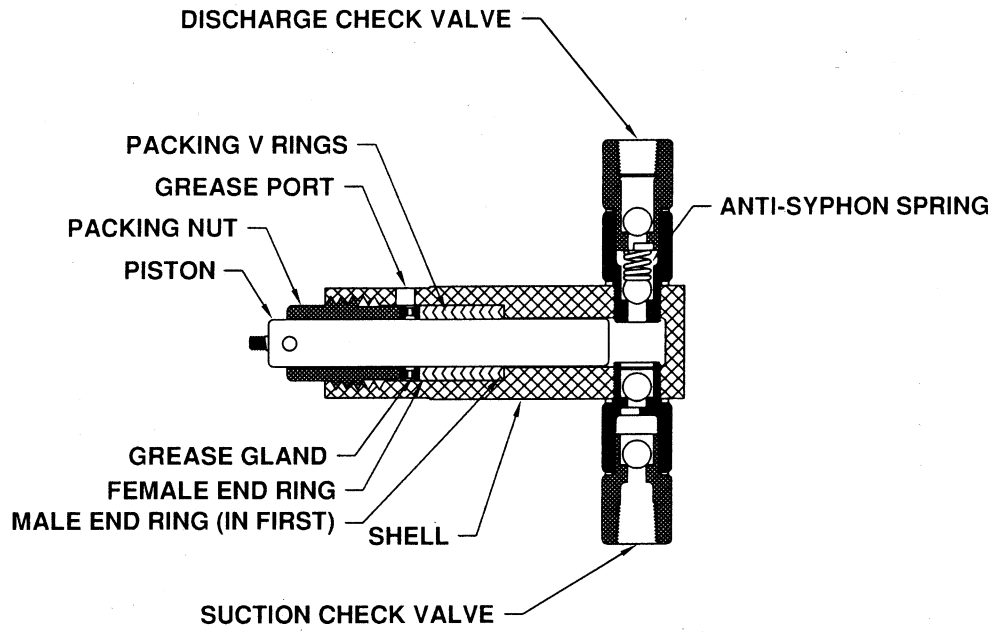

PACKING REPLACEMENT PROCEDURE

1) DISCONNECT ANY PIPING FROM THE SUCTION AND DISCHARGE CHECK VALVES
2) LOOSEN THE TWO SET SCREWS THAT HOLD THE HEAD INTO THE BASE CASTING
3) PULL THE HEAD OUT OF THE BASE CASTING
4) INSPECT THE PISTON FOR WEAR AND REPLACE IF SCORED OR WORN
5) UNSCREW THE PACKING NUT FROM THE HEAD SHELL
6) PULL THE GREASE GLAND AND OLD PACKING OUT OF THE HEAD ONE RING AT A TIME USING A HOOKED TOOL, TAKING CARE NOT TO DAMAGE THE GREASE GLAND
7) CLEAN ANY DIRT OR GRIT FROM THE HEAD SHELL
8) STARTING WITH THE RING MARKED "THIS RING IN FIRST" INSTALL THE NEW PACKING ONE RING AT A TIME MAINTAINING THE PROPER STACK FORMATION. IT IS RECOMMENDED THAT EACH RING BE LUBRICATED WITH GREASE OR OIL BEFORE IT IS INSERTED INTO THE SHELL. THE GREASE GLAND FOLLOWS THE PACKING AND SHOULD BE ALIGNED UNDER THE GREASE PORT
9) THE PACKING NUT SHOULD BE CLEANED AND INSTALLED FINGER TIGHT AGAINST THE GREASE GLAND
10) LUBE THE PISTON AND SLIDE THE PACKED HEAD OVER THE PISTON INTO THE BASE CASTING ALIGNING THE PORT & GREASE FITTING, SECURE WITH THE TWO SET SCREWS
11) SNUG UP THE PACKING NUT-DO NOT OVER TIGHTEN
12) GREASE THE HEAD UNTIL GREASE IS EXPELLED FROM AROUND THE PACKING NUT
13) RECONNECT THE PIPING AND CHECK FOR LEAKS
14) RESNUG THE PACKING NUT AFTER TWO HOURS OF BREAK-IN TIME

1" PISTON HEAD ASSEMBLY

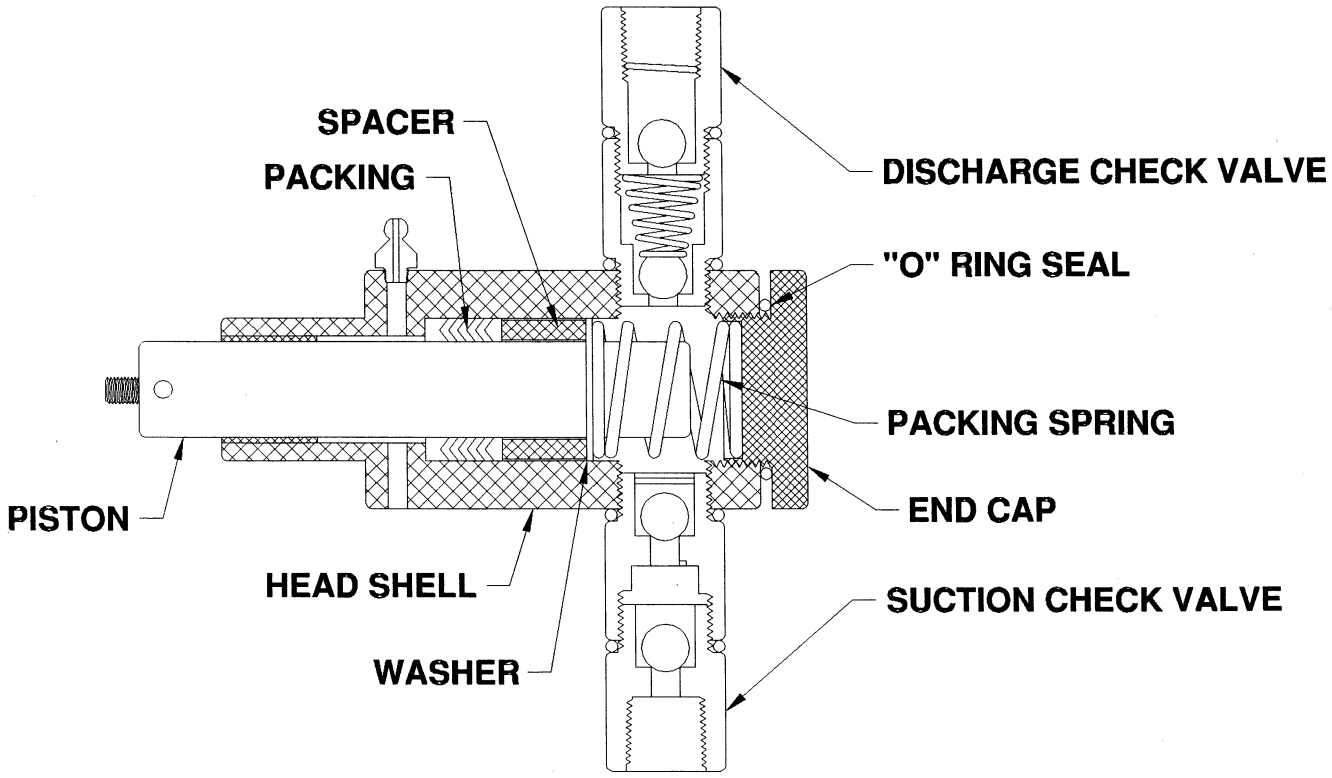

PACKING REPLACEMENT

1) DISCONNECT PIPING FROM THE SUCTION AND DISCHARGE CHECK VALVES
2) LOOSEN THE TWO SET SCREWS THAT HOLD THE HEAD INTO THE BASE CASTING AND PULL THE HEAD OUT OF THE BASE CASTING
3) INSPECT THE PISTON FOR WEAR AND REPLACE IF NECESSARY
4) REMOVE THE END CAP, PACKING SPRING, WASHER, AND SPACER
5) REMOVE THE PACKING USING A HOOKED TOOL
6) CLEAN THE INSIDE OF THE HEAD SHELL OF ANY DIRT OR GRIT
7) INSTALL THE NEW PACKING SET ONE RING AT A TIME STARTING WITH THE RING MARKED "THIS RING IN FIRST" - LUBRICATE EACH RING BEFORE INSTALLING
8) INSTALL THE SPACER, WASHER, AND PACKING SPRING
9) INSPECT THE "O" RING SEAL AND REPLACE IF NECESSARY
10) INSTALL THE END CAP AND TIGHTEN AGAINST THE "O" RING SEAL
11) SLIDE THE PACKED HEAD OVER THE PISTON INTO THE BASE CASTING
12) SNUG UP THE SET SCREWS TAKING CARE NOT TO OVER TIGHTEN, PINCHING THE PISTON
13) GIVE THE HEAD A COUPLE SHOTS OF GREASE AND RECONNECT YOUR PIPING

1 1/2" - 2" PISTON HEAD

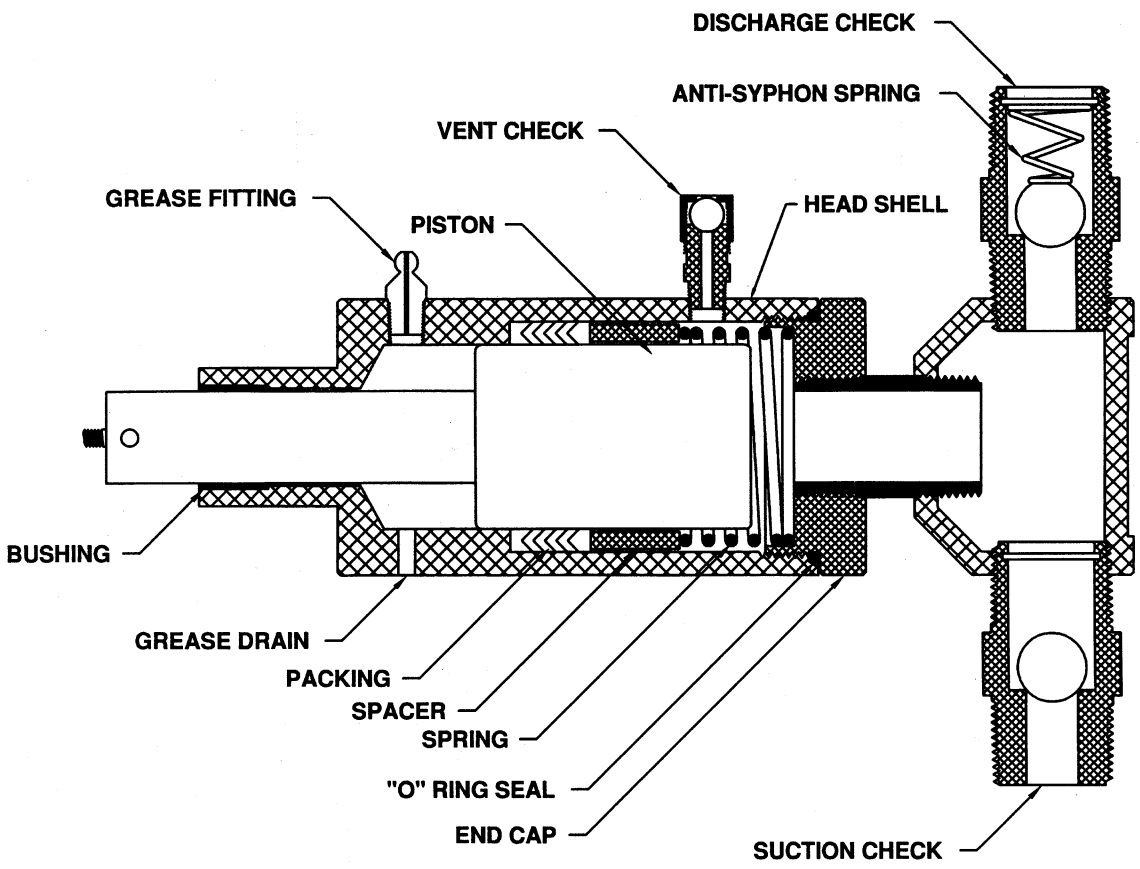

PACKING REPLACEMENT

1) DISCONNECT PIPING FROM THE SUCTION AND DISCHARGE CHECK VALVES
2) LOOSEN THE TWO SET SCREWS THAT HOLD THE HEAD INTO THE BASE CASTING, LOOSEN THE PISTON FROM THE SLIDE, AND PULL THE HEAD OUT OF THE BASE CASTING
3) REMOVE THE END CAP, PACKING SPRING, AND SPACER
4) REMOVE THE PISTON FROM THE HEAD
5) REMOVE THE PACKING USING A HOOKED TOOL
6) CLEAN THE INSIDE OF THE HEAD SHELL OF ANY DIRT OR GRIT
7) INSPECT THE PISTON FOR WEAR AND REPLACE IF NECESSARY AND INSERT INTO THE HEAD
8) INSTALL THE NEW PACKING SET ONE RING AT A TIME STARTING WITH THE RING MARKED "THIS RING IN FIRST" - LUBRICATE EACH RING BEFORE INSTALLING AND USE CARE TO EVENLY SLIDE EACH PACKING PIECE BETWEEN THE PISTON AND THE SHELL
9) INSTALL THE SPACER AND PACKING SPRING
10) INSPECT THE "O" RING SEAL AND REPLACE IF NECESSARY
11) INSTALL THE END CAP AND TIGHTEN AGAINST THE "O" RING SEAL
12) SLIDE THE PACKED HEAD INTO THE BASE CASTING
13) SECURE THE PISTON INTO THE SLIDE ASSEMBLY
14) SNUG UP THE SET SCREWS TAKING CARE NOT TO OVER TIGHTEN, PINCHING THE PISTON
15) GIVE THE HEAD A COUPLE SHOTS OF GREASE AND RECONNECT YOUR PIPING

5/8" DIAPHRAGM HEAD

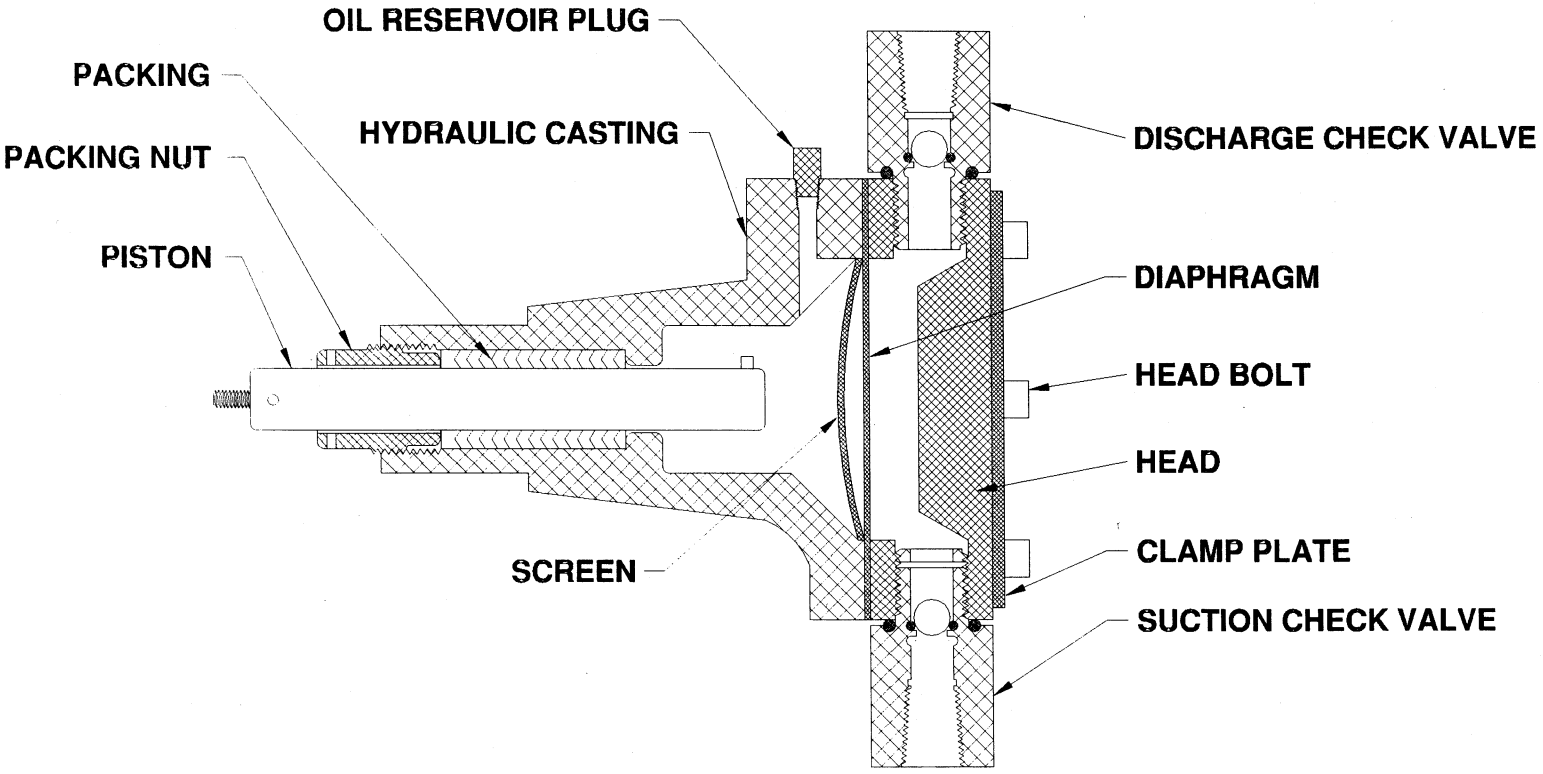

DIAPHRAGM REPLACEMENT

1) REMOVE PIPING CONNECTIONS TO THE SUCTION AND DISCHARGE CHECK VALVES
2) REMOVE THE SIX HEAD BOLTS
3) REMOVE THE CLAMP PLATE AND THE HEAD
4) REMOVE THE DIAPHRAGM (ANY OIL IN THE HYDRAULIC CASTING WILL FLOW OUT)
5) INSTALL THE NEW DIAPHRAGM WITH TEFLON FACE TOWARDS THE HEAD
6) REMOUNT THE HEAD, CLAMP PLATE, AND HEAD BOLTS
7) PUT THE PISTON IN MIDSTROKE AND SNUG THE PACKING NUT
8) REMOVE THE OIL RESERVOIR PLUG AND FILL COMPLETELY WITH OIL (SAE 20)
9) TIP THE HEAD IF POSSIBLE TO REMOVE ANY TRAPPED AIR BUBBLES
10) TOP OFF THE OIL LEVEL AND REPLACE THE PLUG

1" DIAPHRAGM HEAD

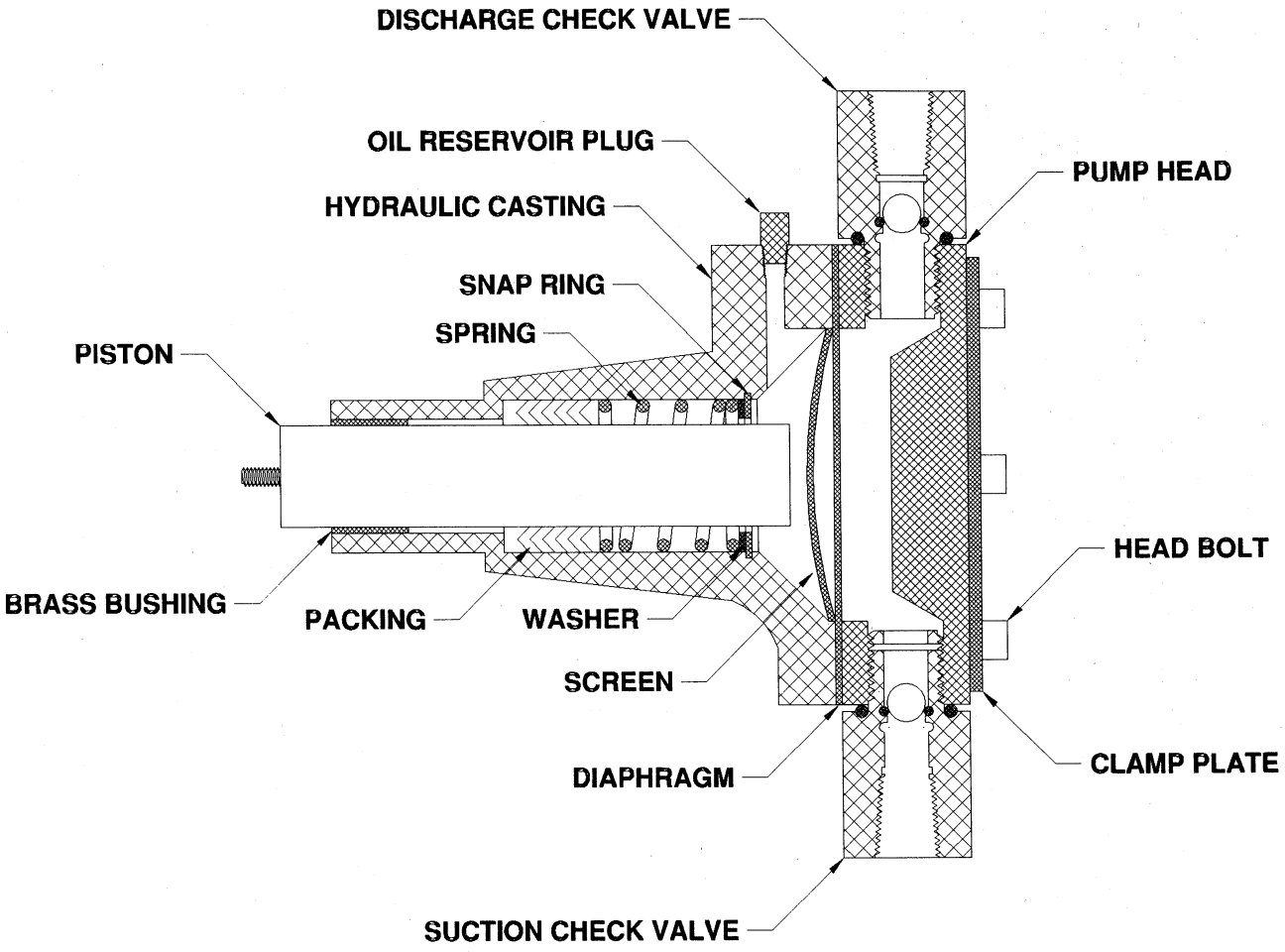

DIAPHRAGM REPLACEMENT

1) REMOVE PIPING CONNECTIONS TO THE SUCTION AND DISCHARGE CHECK VALVES
2) REMOVE THE SIX HEAD BOLTS
3) REMOVE THE CLAMP PLATE AND THE HEAD
4) REMOVE THE DIAPHRAGM (ANY OIL IN THE HYDRAULIC CASTING WILL FLOW OUT)
5) INSTALL THE NEW DIAPHRAGM WITH TEFLON FACE TOWARDS THE HEAD
6) REMOUNT THE HEAD, CLAMP PLATE, AND HEAD BOLTS
7) PUT THE PISTON IN MIDSTROKE AND SNUG THE PACKING NUT
8) REMOVE THE OIL RESERVOIR PLUG AND FILL COMPLETELY WITH OIL (SAE 20)
9) TIP THE HEAD IF POSSIBLE TO REMOVE ANY TRAPPED AIR BUBBLES
10) TOP OFF THE OIL LEVEL AND REPLACE THE PLUG

1 1/2" AND 2" DIAPHRAGM HEADS

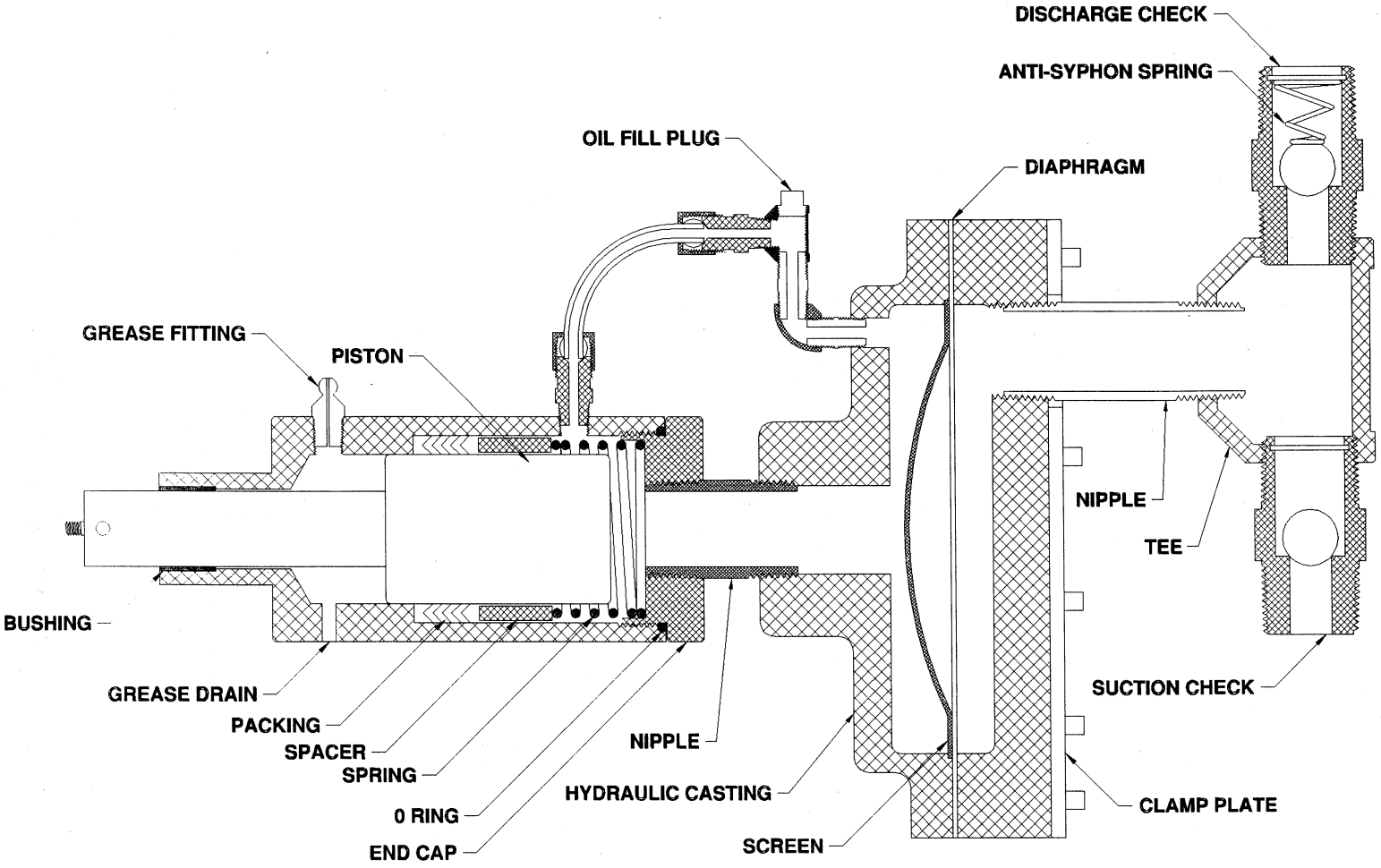

DIAPHRAGM REPLACEMENT

1) REMOVE PIPING CONNECTIONS TO THE SUCTION AND DISCHARGE CHECK VALVES
2) REMOVE THE TWELVE HEAD BOLTS
3) REMOVE THE CLAMP PLATE AND THE HEAD
4) REMOVE THE DIAPHRAGM (ANY OIL IN THE HYDRAULIC CASTING WILL FLOW OUT)
5) INSTALL THE NEW DIAPHRAGM WITH TEFLON FACE TOWARDS THE HEAD
6) REMOUNT THE HEAD, CLAMP PLATE, AND HEAD BOLTS
7) PUT THE PISTON IN MIDSTROKE
8) REMOVE THE OIL RESERVOIR PLUG AND FILL COMPLETELY WITH OIL (SAE 20)
9) TIP THE HEAD IF POSSIBLE TO REMOVE ANY TRAPPED AIR BUBBLES
10) TOP OFF THE OIL LEVEL AND REPLACE THE PLUG

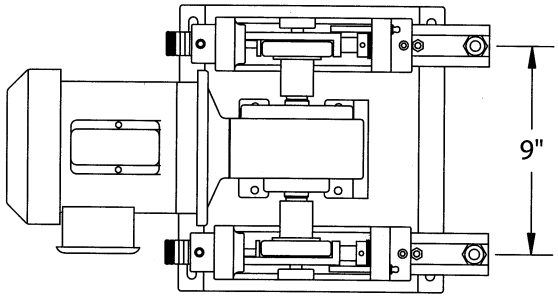

V-10 HORIZONTAL (STANDARD)

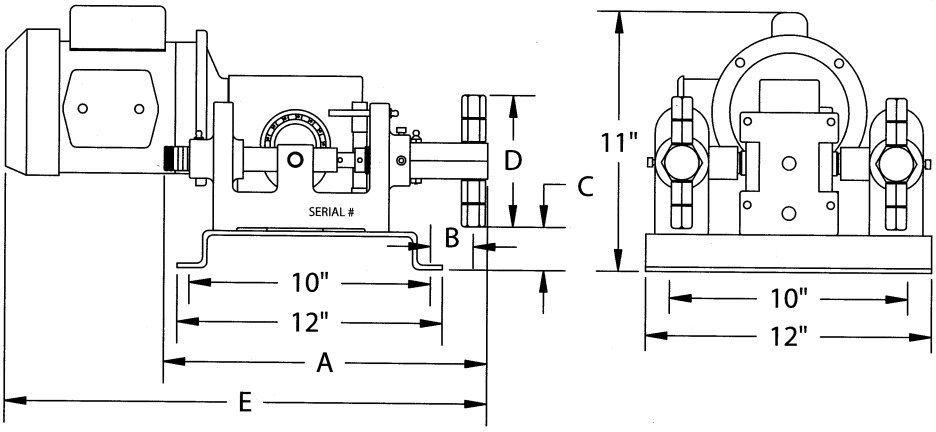

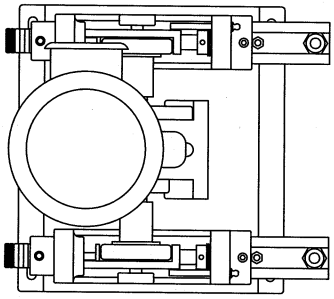

V-10 VERTICAL (OPTIONAL)

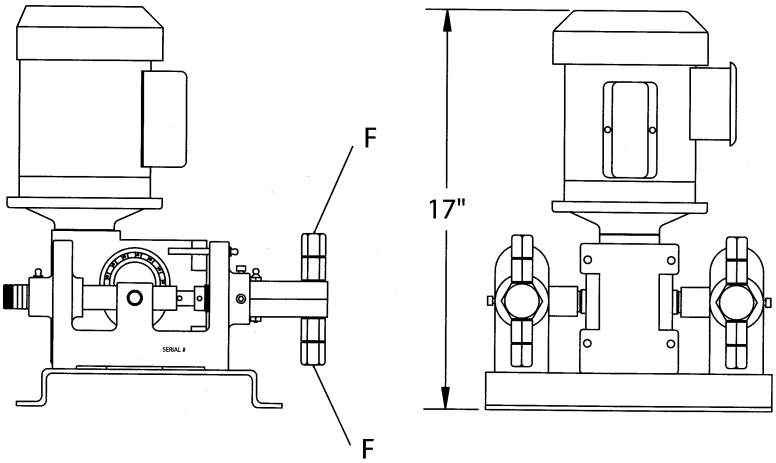

PISTON SIZE	A	B	C	D	E	F
1/4" THRU 5/8"	14"	2"	2"	6"	24"	1/4" NPT
1"	15"	2"	1/2"	8"	25"	1/2" NPT
1 1/2" & 2"	20"	7"	1/2"	8"	29"	1" NPT

Sidewinder Pumps Filter Unit

F4-150-20

Air, gas or liquid chemical filter
Used on suction line of chemical metering pump
All stainless steel construction
20 Micron Polyethylene filter element
Connecting ports are 1/4" FNPT
The element may be replaced without removing the filter from the process line
No wrenches required for maintenance
Excellent for Methanol service
Maximum recommended operating pressure 150 PSI
Burst pressure 2000 PSI
Prolong pump seal and plunger life

Sidewinder Pumps Inc. Lafayette, Louisiana, USA
Office (337) 235-9838 / Fax (337) 235-9852
website: www.sidewinderpumps.com / email: sales@sidewinderpumps.com

Air, Gas or Liquid Filter Parts Break Down

Item	Description	Part Number	Material
1	Filter Body	F4-1	303 SS
2	Filter Canister	F4-2	304 SS
3	Canister Lock Ring	F4-3	303 SS
4	Canister O-ring Seal	F4-5	Aflas
5	20 Micron Filter Element	F4-20	Polyethylene

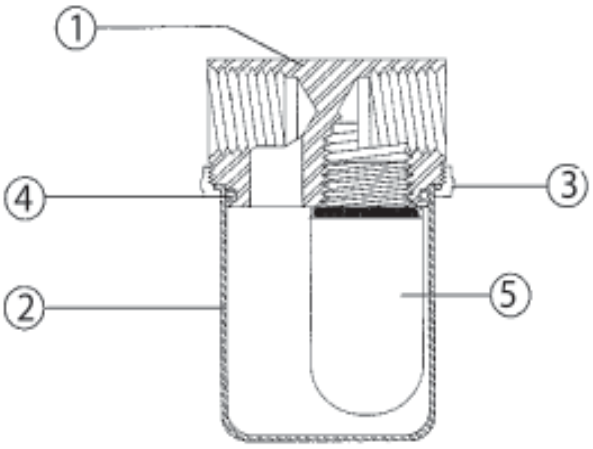

Maintenance Instructions

1. Loosen and remove Canister Lock Ring (3)
2. Pull Filter Canister (2) straight down off of Filter Body (1)
3. Remove Filter Element (5)
4. Insert and hand tighten the new Filter Element (5)
5. NOTE: Filter Element must be "HAND TIGHTEN" only.
6. Inspect and replace Canister O-ring Seal (4) if neccesary
7. Replace Filter Canister (2) and Canister Lock Ring (3) and hand tighten Lock Ring (3)

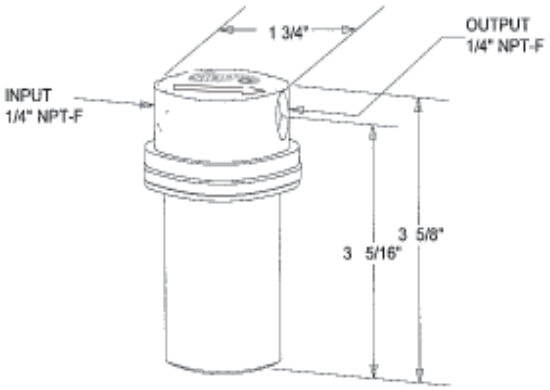

All Dimensions are approximate

Sidewinder Pumps Inc. Information

Sidewinder Pumps Inc.

Office Phone : (337)-235-9838
Office Fax : (337)-235-9852

Mailing Address:
P.O. Box 80769
Lafayette, Louisiana USA 70598-0769

Physical / Shipping Address:
2108 S. W. Evangeline Thruway
Lafayette, Louisiana, USA 70508

V.P. / General Manager: **Paul George**
Marketing Director: **Guy M. Chachere**
Office Manager: **Cathy Louviere**
Production Manager **Bob Ritcher**

Website: **www.sidewinderpumps.com**

Email:
General: **sidewinder@sidewinderpumps.com**
Purchase Order Submittal: **sales@sidewinderpumps.com**
Inquiries/Quotations: **quotes@sidewinderpumps.com**
Product Information: **info@sidewinderpumps.com**

12/2006